Analysis of OFDM System using Smoothing Filter

Rajeev Kumar Yadav[1], Abhinav Shukla[2]

[1]*M.Tech Scholar*, [2]*Assistant Professor*
Department of Electronics and Communication Engineering
Vedica Institute of Technology, RKDF University, *Bhopal, India*
[1]rajeevkumaryadav0123@gmail.com ,[2] abhinav.shukla@hotmail.com

* Corresponding Author: Rajeev Kumar Yadav

Abstract
In optical communication, more than one signals are transmitted in the channel by using the concept of Orthogonal frequency division multiplexing (OFDM) which efficiently handles the inter symbol interference and utilizes the frequency and available bandwidth efficiently. As the transmitting antenna transmit signal in the noisy channel so, it is required to estimate the noise in the channel. The channel estimation technique in noisy channel helps in analysing the effect of noise on the transmitted data. So, in wireless communication, orthogonal frequency division multiplexing (OFDM) plays a major role because of its high transmission rate. In space-time shift keying (STSK), information is transmitted by both spatial and temporal dimensions, which can be used to reach a compromise between diversity and multiplexing gains. Space Time Block Code (STBC) is a powerful technique used at the transmitter to obtain high data rates, a larger capacity, and a low Bit Error Rate (BER). In this research compressed sensing (CS) is studied in order to increase throughput and to decrease bit-error performance by transmitting extra information bits in each subcarrier block as well as to decrease the complexity of the equalizer. In this research, space time block coding algorithm is implemented with channel estimation using ANN technique. The result analysis shows the better performance of proposed methodology with respect to BER.

Keywords: OFDM, Space Time Block Code, Index Modulation, Compressed Sensing (CS), BER, Optical Communication

I. Introduction

With the advent of the internet at the beginning of the 1990s, computerised communication experienced rapid growth. From 1990 to 2009, the Internet grew from zero to two billion users, and remote versatile administrations grew from 10 million to 4.5 billion users worldwide in 2009. Because of the Internet's rapid development, there is a growing interest for faster Internet-based administrations, which is driving the development of broadband remote frameworks. In a short period of time, the total membership for broadband remote administrations surpassed 480 million. It is unavoidable that these innovations, which were once considered extravagances, are now fundamental and necessary. Overall, communication propels have transformed us in the last twenty years.

Our lives are still changing as a result of events and becoming increasingly subject to versatile communication. Furthermore, client requests go beyond simple conversation transmission to "reach and share information everywhere and without fail." This interest has directed the fate of mobile and remote communications toward providing various types of assistance regardless of location with high information rates. To achieve this goal, communication networks should support a wide range of administrations, including excellent voice, actually pictures, real-time recordings, and high information rate applications. As a result, cutting-edge communication frameworks will be defined as a blend of Internet and Multimedia communications, as well as remote versatile communications, in order to achieve high information rates and high inclusion at the same time.

There is a massive expansion sought after of range for massive information transmission over remote channel in this universe of remote communication time. Remote technology is widely used worldwide and is still evolving. Remote innovation has aided in the growth of organisations created outside of office premises or in the field. Individuals and businesses are increasingly relying on remote administrations. Different advantages of remote frameworks include simple establishment, ease, high limit, and minimal transmission mishaps. Because there are no links in a remote framework that can be destroyed, these frameworks are truly hearty. The significant disadvantages of these organisations are security, limited transfer speed, and a much lower limit than optical fibre. However, the problem of limited transfer speed and range was greatly alleviated by using Multicarrier Communication (MC) rather than single carrier communication. OFDM (Orthogonal Frequency Division Multiplexing) is a multicarrier communication procedure that addresses the issue of transfer speed in a remote channel by extending the range of allotted carrier frequencies. OFDM sends multiple images over a remote channel at the same time. Various subcarriers tweak each image. The subcarriers in OFDM are chosen so that they are all orthogonally isolated while still being covered. Because of this orthogonality, demodulators demodulate the various images at beneficiary pertaining to that specific sub carrier.

The significant advantage of OFDM is its effective use of data transfer capacity by covering the subcarriers and its resistance to multipath blurring in remote space. This is possible because the signal is received in various ways at the recipient and continues in the remote channel.

As shown in Figure 1.1, all remote advanced communication frameworks have a few practical squares like computerised communication frameworks. Regardless of whether a remote organisation is confused, the entire framework can be communicated as a collection of transmitter, channel, and collector connections.

The transmitter's primary capability is to obtain information from higher protocol layers and transmit it to the recipient as electromagnetic waves. Encoding (source and channel separately) and modulation are important components of the advanced area. The source encoder's capability is to speak to information by bits in a productive manner. The channel encoder, on the other hand, adds repetitive information to information, allowing the collector to discover and revise transmission errors. The modulator prepares information for transmission over a remote channel by gathering and transforming it into specific images or waveforms. A DAC converts the regulated signal to a delegate simple waveform, which is then upconverted to desired radio frequency (RF) groups by an RF module. At the time, this signal was transmitted as an electromagnetic wave over a radio wire.

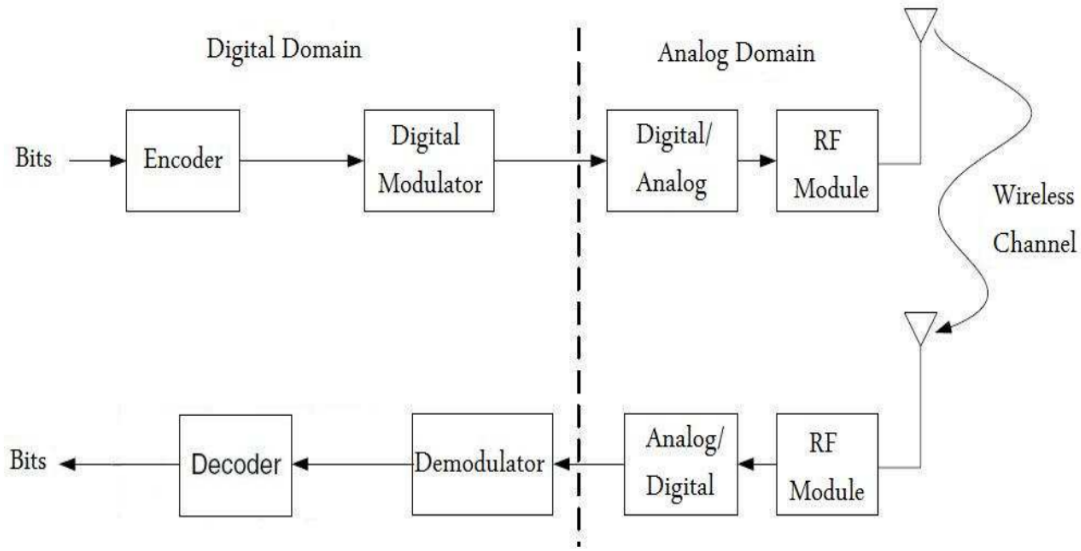

Figure 1.1 Digital Wireless Communication channel.

II. MODEL SYSTEM

A. Multicarrier Modulation (MCM)

Multicarrier modulation (MCM) has gained popularity in recent decades due to its ability to reduce time dispersion in multipath channels while efficiently utilising transmission bandwidth [6]. In multicarrier schemes, data is modulated at relatively low data rates, about 0.1 of the coherence time, and transmitted in parallel over several narrow subchannels created by dividing the transmission bandwidth. The symbol time on each subchannel is extended N times, where N is the number of active subchannels. As a result, channel dispersion does not cause significant impairment because each subchannel has a flat frequency response. OFDM, a subset of MCM technology, is an example of an MCM system.

B. OFDM Scheme

OFDM is a multicarrier transmission method that distributes data symbols across orthogonal subcarriers with overlapped spectra. Since then, OFDM has suffered from ISI issues until 1980, when A. Peled and A. Ruiz introduced the cyclic prefix (CP) to reduce equalisation complexity and avoid the ISI problem in OFDM systems. The CP is the last Ng samples of each OFDM symbol, must be no less than the multipath channel's maximum access delay, and is appended to the beginning of the same OFDM symbol. The success of using the CP in OFDM systems to reduce the effects of ISI encouraged communication engineers to consider OFDM technology for practical applications. As a result, Cimini of Bell Labs proposed OFDM technology for mobile communications in 1985. As a result, Alard and Lassalle investigated the use of OFDM transmission for broadcasting and digital audio broadcasting (DAB) systems in 1987. The success of DAB several years later inspired communication engineers to develop a digital video broadcasting (DVB) system. In terms of wire-line communication, Cioffi and colleagues at Stanford [9] pioneered the use of OFDM as a modulation scheme in discrete multi-tone (DMT) modulation and digital subcarrier loop (DSL) applications. In 1995, the approach of using multiple input-multiple output (MIMO) to exploit channel capacity was proposed four years later. OFDM applications in optical communications have evolved over the last two decades, with Hui proposing the first in 2001.

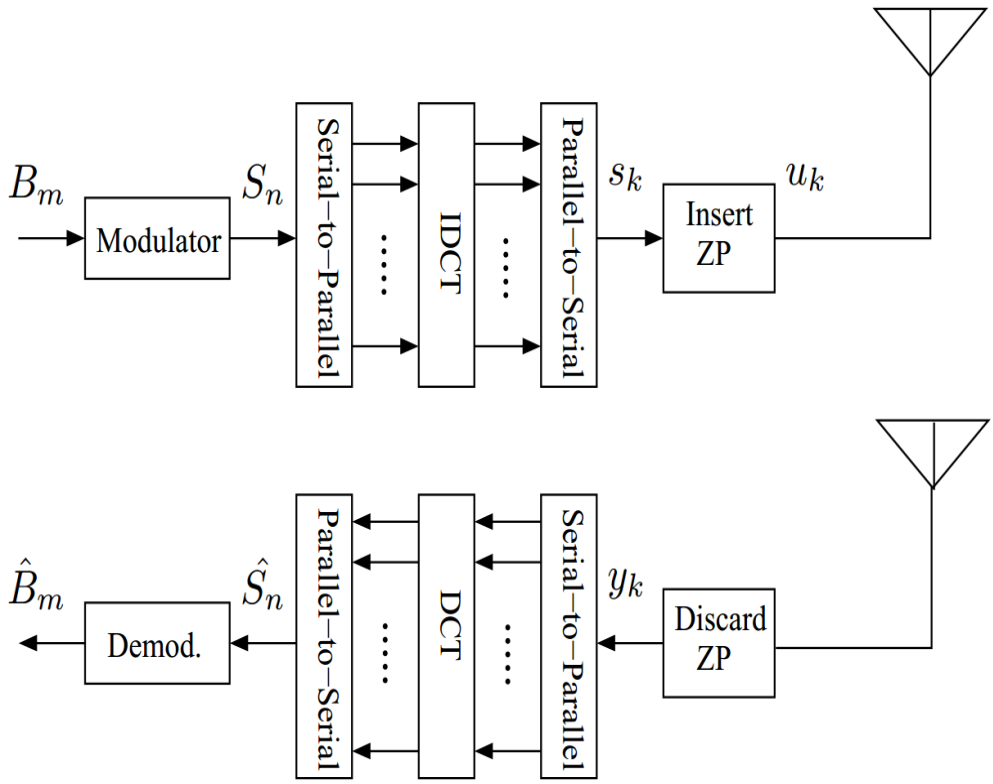

Figure 2.1 Typical OFDM system block.

The DCT-OFDM, unlike the DFT-OFDM, lacks the circular convolution-multiplication property. As a result, a CP like the one used in DFT- OFDM is ineffective. One solution proposed was to double the data; however, this sacrifices bandwidth because half of the transmitted data is redundant data. One of the best solutions is zero padding schemes, which ensure symbol recovery regardless of channel zero locations and explore the full diversity of the OFDM signal.

C. DCT-OFDM System Model

Figure 2.1 depicts the DCT-OFDM system block diagram. The primary distinction between DFT-OFDM and DCT-OFDM systems is that the latter uses the IDCT/DCT for modulation/demodulation instead of the IFFT/FFT. In the case of DFT-OFDM, the zero-padding guard interval is used instead of the CP, as shown in Fig. 2.1.

III. PRIVIOUS WORK

M. A. Imran, Chang He, L. Zhang, J. Mao, Aijun Cao, P. Xiao, and M. A. Imran, In the not-too-distant future, the discrete cosine transform (DCT) based multicarrier framework is viewed as one of the corresponding multicarrier transmission methods for fifth Generation (5G) applications. By utilising cosine premise as orthogonal capacities for multiplexing every genuine esteemed image with image time of T, it is possible to reduce the base orthogonal frequency dispersal to 1/(2T) Hz, which is just half that of discrete Fourier transform (DFT) based multicarrier frameworks. Not only are both prefix and postfix required as symmetric augmentation of information block in the ideal DCT-based framework plan that achieves obstruction free single-tap balance, but additionally a presumed front-end pre-channel is fundamentally presented at the recipient side. Because the pre-separating measure is essentially a period switched convolution for infinite data sources, the yield signal-to-noise ratio (SNR) for each subcarrier after sifting is improved. In this paper, the effect of pre-sifting on framework execution is investigated in terms of ergodic yield SNR per subcarrier. This is followed by a reformulated recognition standard where such sifting measure is being considered. The proposed location calculations improve the general piece blunder rate (BER) execution adequately under changed recognition standards, according to mathematical results.

A. Ijaz and colleagues [2] The actual layer radio casing boundaries for fifth generation (5G) portable cell frameworks are expected to be deftly designed to adapt to various requirements of various situations and administrations. This paper presents an edge construction and plan that is explicitly focused on Internet of Things (IoT) arrangement in 5G remote communication frameworks. Plan a reasonable radio numerology to help the standard characteristics, for example, huge association thickness and small and bursty parcel transmissions, with the limitation of ease and low multifaceted nature operation of IoT gadgets. We also expand on the design of boundaries for irregular access channels, enabling massive association demands by IoT gadgets to help the required association thickness. The proposed configuration is validated by interface level reproduction results, demonstrating that

the proposed numerology can accommodate handset flaws and channel limitations. Furthermore, the results are presented to demonstrate the effect of various gatekeeper band estimations on framework execution utilising various subcarrier dispersion sizes for information and irregular access channels, demonstrating the viability of the chosen waveform and watchman transmission capacity. Finally, present framework level reproduction results that validate the proposed plan under realistic cell organisation and cell impedance conditions.

R. Tafazolli, L. Zhang, A. Ijaz, P. Xiao, A. Quddus, and L. Zhang, [3] To effectively support various correspondence necessities (e.g., throughput, idleness, massive association, and so on) for cutting edge remote interchanges, one practical solution is to isolate the framework transfer speed into a few assistance subbands, each for a different kind of administration. Each help has its own ideal casing structure in such a multi-administration (MS) framework, while the administrations are disengaged by subband sifting. In this paper, a framework for multi-administration (MS) is built using subband filtered multi-carrier (SFMC) modulation. Consider single-rate (SR) and multi-rate (MR) signal handling to be two distinct MS-SFMC executions, each with a unique execution and computational complexity. By correlation, the SR framework outperforms the MR framework in terms of execution, while the MR framework has significantly less computational intricacy than the SR framework. The mathematical results demonstrate the viability of our investigation and the proposed frameworks. These proposed SR and MR MS-SFMC frameworks establish guidelines for cutting-edge remote framework outline structure streamlining and calculation strategy.

P. Xiao, L. Wen, R. Razavi, M. A. Imran, and L. Wen, [4] Individually, low thickness signature orthogonal frequency division multiplexing (LDS-OFDM) and low thickness equality check (LDPC) codes are multiple entrance and forward error correction (FEC) procedures. A bipartite chart can help them communicate with one another. Build a joint inadequate diagram consolidating the single charts of LDS-OFDM and LDPC codes in this work, particularly a joint meagre diagram for OFDM (JSG-OFDM). Based on the diagram model, a low-complexity approach for joint multiuser recognition and FEC disentangling (JMUDD) is presented. The JSG-OFDM collector's iterative design is defined, and its extrinsic information transfer (EXIT) diagram is investigated. Furthermore, the EXIT graph examination determines the plan rules for the joint inadequate diagram. The JSG-OFDM achieves 1.5-1.8 dB execution improvement at a cycle mistake rate (BER) of 10-5 over comparative notable frameworks, for example, bunch orthogonal multi-carrier code division multiple entrance (GO-MC-CDMA), LDS-OFDM, and super organised LDS-OFDM, based on offline enhancement of the joint meagre chart.

S. ten Brink, X. Wang, T. Wild, F. Schaich, and F. Schaich,[5] The Universal Filtered Multi-Carrier (UFMC, also known as UF-OFDM) modulation strategy is a novel multi-carrier modulation strategy that aims to trade OFDM for cutting-edge remote correspondence frameworks (5G). It is an OFDM and channel bank based multi-carrier (FBMC-FMT) speculation that combines the advantages of OFDM and FBMC while avoiding their primary disadvantages. UFMC has been demonstrated to be more resilient in loosened up synchronisation conditions, for example, time-frequency misalignment, when compared to conventional CP-OFDM frameworks. UFMC is more capable of assisting short uplink blasts interchanges, as required in likely situations of 5G frameworks. Without the addition of a cyclic prefix, investigate the method and execution of pilot-aided direct assessment for UFMC in an uplink multi-client FDMA situation and demonstrate that practically a similar presentation as CP-OFDM can be accomplished. If timing and frequency offset occur, UFMC demonstrates its superiority over CP-OFDM in terms of image mistake rate (SER). The results of the game show that the blunder floor is reduced when various types of channels are considered using UFMC.

R. Razavi, P. Xiao, and R. Tafazolli [6] Through information hypothetical investigation, the limit of OFDM/OQAM with isotropic orthogonal transfer calculation (IOTA) beat forming is assessed in this work. The inclusion of a cyclic prefix (CP) in ordinary OFDM frameworks reduces the framework's spectral efficiency. In contrast to OFDM, channel bank based multicarrier frameworks use legitimate heartbeat forming with excellent time and frequency localization properties to avoid obstruction and maintain orthogonality in genuine field among sub-carriers without the use of CP. compare the spectral efficiency of OFDM/OQAM frameworks with IOTA heartbeat moulding to conventional OFDM/QAM frameworks, and our scientific model is also extended to gain insights into the impact of using the inherent impedance on the exhibition of our framework. Furthermore, the spectral efficiency of OFDM/OQAM frameworks is investigated when the impact of image and carrier obstruction is considered.

TABLE 1: SUMMARY OF LITERATURE SURVEY

SR. No.	Title	Authors	Year	Methodology
1	Output SNR analysis and detection criteria for optimum DCT-based multicarrier system,	Chang He, L. Zhang, J. Mao, Aijun Cao, P.	2018	The impact of pre-sifting on framework execution is broken down to the ergodic yield SNR per subcarrier level.

		Xiao and M. A. Imran,		
2	Enabling Massive IoT in 5G and Beyond Systems: PHY Radio Frame Design Considerations,	A. Ijaz et al.,	2016	Interface level reproduction results validate the proposed configuration, demonstrating that the proposed numerology can adapt to handset flaws and channel impedances.
3	Single-rate and multi-rate multi-service systems for next generation and beyond communications,	L. Zhang, A. Ijaz, P. Xiao, A. Quddus and R. Tafazolli,	2016	A framework for multi-administration (MS) is established based on subband filtered multi-carrier (SFMC) modulation.
4	Design of Joint Sparse Graph for OFDM System,	L. Wen, R. Razavi, M. A. Imran and P. Xiao,	2015	Create a joint meagre diagram by combining the single charts of LDS-OFDM and LDPC codes, with a focus on the joint scanty chart for OFDM (JSG-OFDM)
5	Pilot-Aided Channel Estimation for Universal Filtered Multi-Carrier,	X. Wang, T. Wild, F. Schaich and S. ten Brink,	2015	In an uplink multi-client FDMA situation, investigate the system and execution of pilot-aided direct assessment for UFMC.
6	"Information Theoretic Analysis of OFDM/OQAM with Utilized Intrinsic Interference,	R. Razavi, P. Xiao and R. Tafazolli,	2015	Compare the spectral efficiency of OFDM/OQAM frameworks with IOTA heartbeat moulding to conventional OFDM/QAM frameworks.

IV. PROBLEM STATEMENT

Because OFDM uses plain text transmission, data transmitted in the wireless domain could be easily accessed by unauthorised users. It is critical to securely transmit data in the wireless domain. It is critical to determine the exact start of the OFDM symbol at the receiver. Any error in the timing estimation of an OFDM symbol will cause receiver de-synchronization and degrade system performance. Furthermore, system performance suffers as a result of frequency selective time varying fading channels. OFDM systems based on FFT have a high PAPR. The loss of orthogonality between OFDM system subcarriers significantly degrades system performance. Because of its increased complexity and higher transmitter and receiver demands, OFDM cannot be considered for every communication system. However, by implementing modern digital signal processing techniques, this modulation system can be used to significantly improve the reliability of the communications link.

V. CONCLUSION

This work has primarily focused on improving the performance of multicarrier modulation techniques. In this work, various literatures are studied and revived. The increase in user demand for high data rate services regardless of location has prompted research into the future of communication on high speed wireless systems. However, wireless channels have some drawbacks, making it difficult to achieve this goal under these conditions. The majority of these disadvantages are discussed in the literature, and numerous techniques are proposed to deal with them. A survey report on multi carrier transmission systems is presented in the proposed work. However, because of its sensitivity to phase differences, OFDM is a well-known concept that suffers from phase noise. As a result, an extended version of this algorithm could be used for OFDM-based communication schemes. Because this algorithm is appropriate for this extension, the results will be satisfactory.

REFERENCES

[1] Chang He, L. Zhang, J. Mao, Aijun Cao, P. Xiao and M. A. Imran, "Output SNR analysis and detection criteria for optimum DCT-based multicarrier system," 2016 International Symposium on Wireless Communication Systems (ISWCS), Poznan, 2018, pp. 59-64.
[2] A. Ijaz et al., "Enabling Massive IoT in 5G and Beyond Systems: PHY Radio Frame Design Considerations," in IEEE Access, vol. 4, no. , pp. 3322-3339, 2016.
[3] L. Zhang, A. Ijaz, P. Xiao, A. Quddus and R. Tafazolli, "Single-rate and multi-rate multi-service systems for next generation and beyond communications," 2016 IEEE 27th Annual International Symposium on Personal, Indoor, and Mobile Radio Communications (PIMRC), Valencia, 2016, pp. 1-6.).
[4] L. Wen, R. Razavi, M. A. Imran and P. Xiao, "Design of Joint Sparse Graph for OFDM System," in IEEE Transactions on Wireless Communications, vol. 14, no. 4, pp. 1823-1836, April 2015.

[5] X. Wang, T. Wild, F. Schaich and S. ten Brink, "Pilot-Aided Channel Estimation for Universal Filtered Multi-Carrier," 2015 IEEE 82nd Vehicular Technology Conference (VTC2015-Fall), Boston, MA, 2015, pp. 1-5.
[6] R. Razavi, P. Xiao and R. Tafazolli, "Information Theoretic Analysis of OFDM/OQAM with Utilized Intrinsic Interference," in IEEE Signal Processing Letters, vol. 22, no. 5, pp. 618-622, MARCH 2015.
[7] F. Hu, L. Jin, J. Li and J. Ji, “Novel Constructions of MIMO STBC Designs Employing Four Transmit Antennas,” 2012 International Conference on Industrial Control and Electronics Engineering, Xi’an, 2012, pp. 1269-1272.
[8] T . S. Rappaport: “Wireless Communications - Principles And Practice," Pearson Education, 1997.
[9] T. M. Du man and Ali Ghrayeb: “Coding for MIMO Communication System," John Wiley and sons, 2007.
[10] V. Tarokh, N. Seshadri, and A. R. Calderbank: “Spacetime codes for high data rate wireless communication: Performance analysis and code construction," IEEE Transactions on Information Theory, vol. 44, issue 2, pp. 744-765, March, 1998.
[11] S. M. Alamouti: “A simple transmit diversity technique for wireless communications," IEEE Journal on Selected Areas in Communications, vol. 16, issue 8, pp. 1451-1458, October, 1998.